LLM Statements

For this project we used LLM for the following parts:

- Used for brainstorming about the BPMN model. Note that brainstorming is not the same as creation. The BPMN model was not created with AI.

Introduction

This paper was written by Max Harmsen (2335778), Matt ter Steege (9932003) and Marc Jan van Veldhuizen (1263285), all part of group 1-4. The paper will evaluate the business process: *Sourcing sustainable materials* in the context of IKEA Nederland B.V.. This business process was derived from the previous assignment (Harmsen et al., 2026). The process will be explored through the use of the business process management (BPM) life cycle. Within this BPM, this paper will make use of a process map to support the process identification. Based on a BPMN schema, the current process will be discovered. Using the BPMN schema, the process will be analyzed through a value-added analysis. Problems that showed during this analysis are being redesigned by creating a new, optimized BPMN model. After that, the redesign will be implemented by looking at 2 domains, being ICT-systems and organization culture. These implementations will than be concluded by giving an estimated timeline of how long the redesign process is going to take. Lastly, this paper will finish with 3 indicators that check whether the redesign process served its purpose.

1 | Process identification

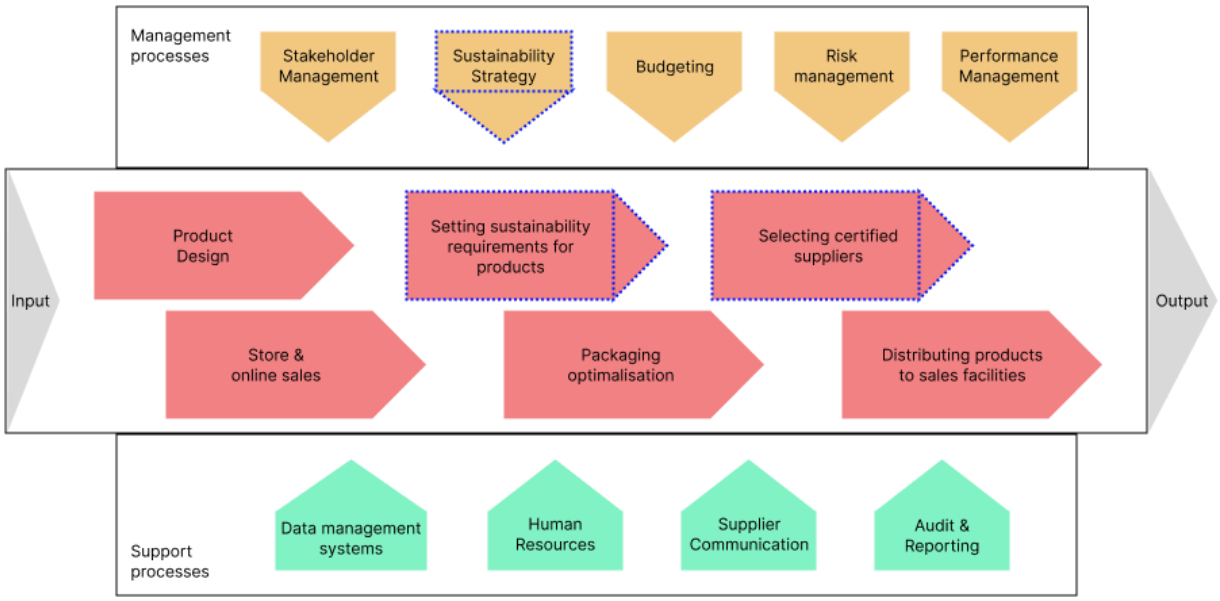

Figure 1: High level process map of IKEA

The figure above (Figure 1) shows an high level process map of IKEA. This means that the most important processes of IKEA are modeled, while in-depth processes are left from the scope. This to prevent a over complicated process map.

Let us evaluate the most important processes shown in figure 1. Since IKEA has its own product lines (called collections ("Collection. Buy Online & In-store!", n.d.)), in order to get products to the customers, those products first have to be designed. During the design process, it is important to set certain requirements for the materials that the products need to be made of. The products have to be durable, but at the same time as cheap as possible. That is where the core process *Setting sustainability requirements for products* and the management processes *Sustainability Strategy* and *Stakeholder Management* are coming together. While an example of the sustainability strategy states that wood that is used for their products must be FSC©-certified or recycled whenever this is possible ("The wood we use – IKEA Global", n.d.), the stakeholders want a high revenue. When, with the help of the management processes, the sustainability requirements are set, suppliers have to be selected that meet those requirements. It is important to select a supplier that does not only meet the sustainability requirements, but can also supply the products or materials on the scale that IKEA wants it. This last demand for suppliers is regulated by the management process *Performance Management*. If the supplier cannot meet the supply scale that IKEA demands, performance cannot be guaranteed. When a supplier is signed, the support process *Supplier Communication* will make sure that the connections with the supplier are kept well, and that contracts are followed as originally signed. Now that the supplier is supplying the products, the items can be set for sale in either a physical store or web shop. The employees that work within those stores also have to be listened to and cared for. That is where the support process *Human Resources* comes in. To get the products to the stores, it is important to optimize packaging. This not only is a core concept of IKEA, but it also cuts costs in transporting the products, which is the next core process. Cutting costs is required by the management process *Budgeting*. Lastly, all the just mentioned packed products have to be distributed to either the stores or to the people at home who ordered their products online. Note that not all support and management processes where mentioned. This does not mean that these processes are not important, because they are. However, the processes that where not mentioned above are trivial and do not need a further explanation.

The processes that have a blue dotted line around them are the processes that are most important for the sourcing of sustainable materials. Where the management sets the general sustainability strategy for all processes and products of IKEA, each product has to also set certain sustainability requirements themselves that are specific to that product. For example, while the general strategy states that wood must always be FSC©-certified or recycled, this specific product might also require the product to be made with as little water as possible (meaning the wood does not have to be cleaned thoroughly). Lastly, even though the requirements might be set, it is important to also find a supplier that can abide these requirements while also supplying on the scale that is necessary for IKEA.

2| Process discovery

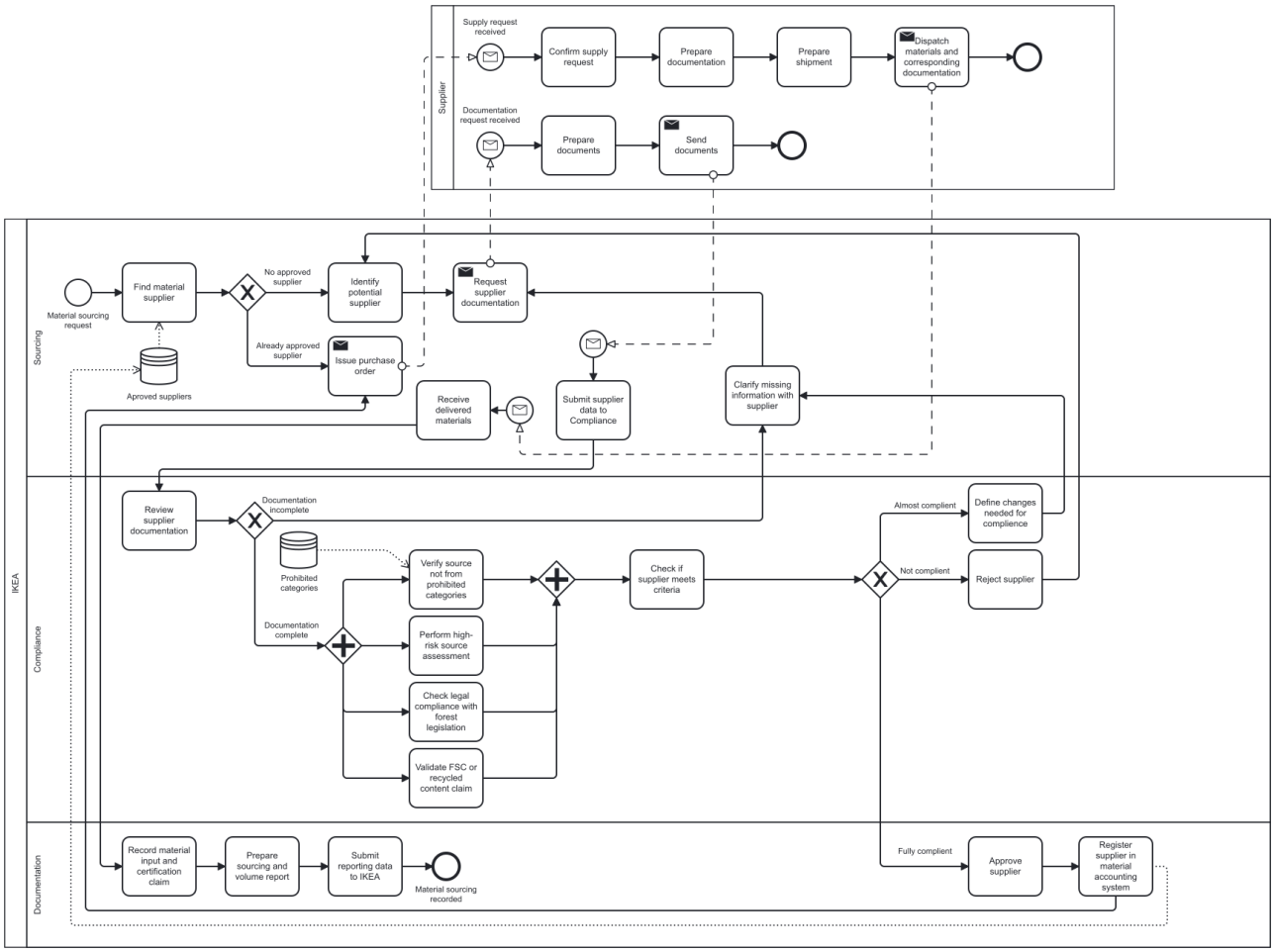

Figure 2: BPMN diagram of IG2.1 Sourcing certified materials

This BPMN diagram shows how IKEA buys materials. The biggest part of this diagram is gathered from IKEA's IWAY standard (IWAY, n.d.). This standard tells us what IKEA expects from their suppliers and to what requirements the materials need to adhere.

The process starts with the intention to buy materials (the *Material sourcing request*) here a check is made if IKEA already has an supplier that they approved before to speed up the sourcing process. If this is the case a purchase order is made. If this is not the case, the compliance department of IKEA needs to find a new supplier, they identify possible suppliers and try to get documents about their way of sourcing. This is then checked by IKEA's compliance department for legal compliance, FSC compliance and other requirements. If and only if all requirements are met, then the supplier is approved. It may happen that not al documentation is valid or complete, that is send back to the supplier for further clarification. Suppliers can also be rejected then the whole supplier search is redone.

When IKEA (now) has a supplier for a the needed materials a purchase order, when this order is fulfilled by the supplier, then the purchased materials are recorded in their stock management system.

3| Process analysis

Activity	Value	Reason
Find material supplier	VA	IKEA must find suppliers in order to sell products.
Identify potential supplier	VA	Not every supplier is allowed to be an IKEA supplier. That is why the first identification is crucial. Without this identification, the following process should be followed for every supplier ever, and that would take too much unnecessary time.
Request supplier documentation	NNVA	Needed to later check the suppliers compliance.
Prepare documents	NNVA	This step has to be followed by the supplier to be able to become an IKEA supplier.
Send documents	NNVA	The documents from the supplier have to be sent to IKEA in order for IKEA to evaluate them.
Submit supplier data to compliance	NNVA	This step ensures the checking process is started.
Review supplier documentation	**NVA**	Check whether all documents necessary for the checks are provided. This step should not be needed, since a supplier must have a clear view of what documents are needed, meaning IKEA shouldn't have to check whether all documents are present before starting to evaluate them.
Clarify missing information with supplier	**NVA**	In a good process, this step is not allowed since all the information had to be clear from the beginning. This step only means that either the supplier was negligent or IKEA wasn't clear about the rules around suppliers.
Verify source not from prohibited categories	NNVA	This is 1 of the 4 compliance checks that are necessary to evaluate whether the supplier is an option to be an IKEA supplier.
Perform high risk source assessment	NNVA	This is 1 of the 4 compliance checks that are necessary to evaluate whether the supplier is an option to be an IKEA supplier.
Check legal compliance with forest legislation	NNVA	This is 1 of the 4 compliance checks that are necessary to evaluate whether the supplier is an option to be an IKEA supplier.
Validate FSC or recycled content claim	NNVA	This is 1 of the 4 compliance checks that are necessary to evaluate whether the supplier is an option to be an IKEA supplier.
Check if supplier meets criteria	NNVA	Follows from the previous 4 checks. This step combines all the results and sees whether a supplier met all the conditions.
Define changes needed for compliance	**NVA**	This step is IKEA helping the supplier to still get the compliance rights. By doing this step, IKEA increases the chance of a match with that supplier. This is profitable for IKEA, since the longer IKEA has to search, the more money it costs IKEA. However, this step should not be implemented this late in the process. Apparently the supplier could have already known what compliance he had to fulfill but didn't.
Reject supplier	NNVA	I needed to make sure that the process was stalled before placing an order at the supplier.
Approve supplier	NNVA	Needed to ensure the process can safely continue.
Register supplier in material accounting system	NNVA	Makes sure that the suppliers get paid correctly

Activity	Value	Reason
Issue purchase order	VA	This order is essential since this will result in either getting the product for the customers or getting the materials to make those products.
Confirm supply request	NNVA	Now, IKEA can be sure their supply request has gotten through and will be fulfilled. The actual order was already placed, so this step doesn't create any value.
Prepare documentation	NNVA	This documentation will later be used for IKEA to create their internal reports.
Prepare shipment	NNVA	The main goal of IKEA is to receive the products; however, preparing the shipment is highly necessary to be able to send the materials.
Dispatch materials and corresponding documentation	VA	This step ensures that the products are also transferred to IKEA, who can then provide their customers with the products.
Receive delivered materials	VA	Now, the processing and distribution of the products can start among the IKEA stores.
Record material input and certification claim	NNVA	This step both ensures that the inventory management system stays up-to-date while also providing IKEA with proof for their yearly reports that they followed the sustainability clauses IKEA promised.
Prepare sourcing and volume report	**NVA**	When doing this for each order from every supplier, there will be a large duplicate parts between the reports. Suppliers already supply invoice with the amount of bought materials.
Submit reporting data to IKEA	NNVA	The IKEA headquarters might want reports to get a good overview of all suppliers; however, the kind of reports might have to change (see above).

Table 1: Value Analysis resulting from BPMN model (Figure 2)

Legend: VA = Value Added; NNVA = Necessary Non-Value Added; NVA = Non-Value Added.

Value-added analysis

In table 1 an value-added analysis of the BPMN model shown in figure 2. For this analysis, the activities were put into 3 groups. The first group is value-added activities. These activities have direct impact on the goal, which is sourcing sustainable materials. The second group consists of necessary non-value-added activities. Activities in this group cannot be removed from the process since they are necessary to achieve the main goal, however these activities do not directly contribute to the main goal. Lastly, the non-value-added activities. This group must be identified to be removed in future iterations of the process. Non-value-added activities are excessive activities within a process that do take up resources and time, but do not benefit the process in any way as Peterka (2025) states. Non-value-added activities are stated with a bold font in table 1 to show what processes will be changed in the process redesign (Section 4).

Conclusion

The value-added analysis provides 2 important insights. The first being the fact that there is a lot of bureaucracy involved in the process of finding a new supplier. This can be concluded because of the many NNVAs. These processes are needed to support the main process. However, when we look closely, most NNVA's are either preparing documents or sending documents between IKEA and the supplier or within IKEA. This can be explained by the size of IKEA. Because IKEA is situated throughout the whole Netherlands, there has to be some general management that streamlines all the branches. In order to do this, a lot of rules have to be in place. Since there is a wish to check whether the rules are followed, every step has to be documented (and therefore be traceable). The second important insight are the 4 activities that belong to the Non-Value-Added

(NVA) group. The activities *Define changes needed for compliance*, *Clarify missing information with supplier*, and *Review supplier documentation* are redundant. These steps shouldn't be necessary in the first place. The supplier should either be a fit for IKEA or not, but asking for necessary documents should already have been filtered out way earlier in the process. For more information about the solution, see section 4. The activity *Prepare sourcing and volume report* is only an unnecessary overhead that requires resources and time. It is better to use a general supplier management system that just refreshes when a new supplier is added, instead of generating a report after each invoice.

4| Process redesign

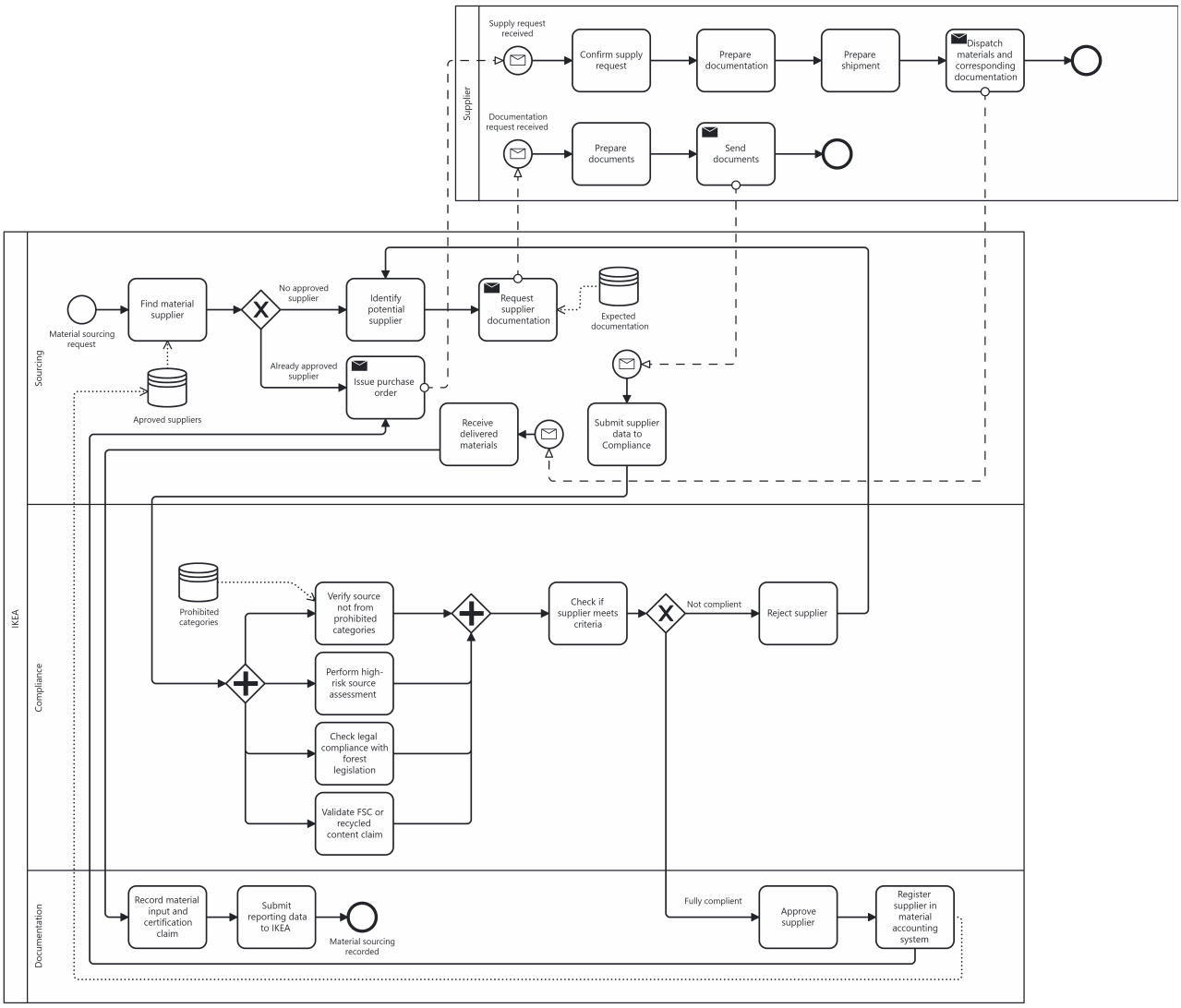

Figure 3: revised BPMN diagram of IG2.1 Sourcing certified materials

The updated BPMN diagram 3 has a couple of changes. The new diagram has an edited supplier rejection path. As stated in the process analysis (section 3) the documentation should not have to be rejected for incompleteness since IKEA already states what documents are needed to comply as an supplier, when these requirements are not met it can be a sign of negligence on the supplier side it should be rejected. This also has direct impact on the "clarify missing information with supplier" process, this process is called when documentation is either incomplete or not complying with the IWAY standard (IWAY, n.d.) and/or any other legal standard. This same explanation can be used on the process and corresponding XOR-gate checking whether or not the supplier documentation is complete or not. This also has an other benefit, since the time needed to check if the supplied

documentation is complying with IKEA's IWAY standards and other legislation could be drastically reduced. This is due to possible automation on IKEA's part, every needed document is already well-defined and could be used as a starting point for partial automatic acception or rejection. At last the "prepare sourcing and volume report" process has also been omitted, since this data is already provided by IKEA's material supplier. This data, containing the logical invoice data such as volume and cost are already send to IKEA, nothing is free of course.

5 | Process implementation

The proposed redesign that was just mentioned will now be broken down into 3 parts. These parts will show the changes that have to be made within the organization to achieve a successful redesign. The following section will discuss possible change in ICT-systems, organization culture and potential difficulties. Lastly, the estimated implementation time of this redesign process will be given.

ICT-systems

For the implementation there is no need for a completely new ICT-System, however, there will be some changes in the system logic. Previously, suppliers could also be half rejected, meaning they had to supply more documents to be accepted. After the redesign, this will change. Now, a supplier can either be rejected or accepted, since all the documents will be supplied from the beginning of the process.

Organisation culture and potential difficulties

There won't be a great organization culture shift, because there are no extra demands for the suppliers to live up to. Because there is less work at the compliance part of the company, less employees will be needed. Those employees will get the possibility to get a position at an other place in the company through following the following steps:

1. Interviews with all the employee about their strong quality's .
2. The employees will be informed about all the positions they can get into and they will need to give their favor of which positions they want to fulfill.
3. The interviews and the favored position of the employees will be matched and they will be given a job offer at those position.

The possibility to get a other position at the company is implemented because of the current job market. IKEA might not want to lay off their employees, since it might be difficult for IKEA to later start a whole new recruiting program.

Estimated timeline

The process to shift to the redesign will be quite simple to implement because there is no need for a big new ICT-system, so 2 months will be realistic.

Month: 1 Start the changes and make the preparations for the campaign of suppliers.

Month: 2 Fully implement the process and do this under close monitoring so that there won't be any unexpected shortages.

6| Process monitoring and controlling

Indicator 1 (Percentage of approved suppliers)

The first indicator to evaluate the performance of the to-be process, is to measure the percentage of suppliers with perfect documentation. This entails suppliers who satisfy the requirements set by IKEA, these will receive checked and approved documents. The percentage is calculated by using the following formula:

$$\frac{\text{Number of accepted suppliers}}{\text{Number of submitted suppliers}} \times 100$$

Ideally, 100% of all the potential suppliers have approved paper. Although, from realistic point of view, achieving a target of 85% is more commendable goal. Collecting data about the suppliers is important to ensure safe transaction and increase reliability. In addition, the formula also indicates the number of rejected suppliers. If the number of rejected suppliers is high, it indicates that the process is inefficient, since the process is time consuming without getting a positive return.

Indicator 2 (Average duration of checking suppliers documentation)

As mentioned in the section about indicator 1, it is a rather time consuming and inefficient activity. The to-be process, accelerates this activity by utilizing technologies, which automates the document verification and checking process. The second indicator measures how much make it takes to check the suppliers documentation. This time is from the moment the request for a check is made to the moment a supplier is checked and given the status approved or rejected.

$$\frac{\sum_{i=1}^{4} (\text{Date check } i \text{ complete} - \text{Date request to check } i \text{ was made})}{4}$$

The average duration of checking is in hours (h). The duration is calculated by gathering the time-stamp at which the request for verification is submitted and the time-stamp at which the supplier is checked and either approved or rejected. The penultimate is then subtracted from the time at which the supplier is checked and divided by four, resulting in the average duration.

Due to the automatization, this process should gain enormous time efficiency. Where previously 4 people had to simultaneously work on the same supplier to get the request done within 1 working day. After the automatization has been implemented, documentations can be checked within a half hour, since computers can look for patterns way more efficiently.

Indicator 3 (Turnover rate)

Every company needs stock, IKEA is not the odd one out here. Thus it is a good indicator to know if you have enough supplies to be able to produce products comfortably. This can be measured by taking the volume of material you use in a year and divide it by the average stock of said material. ("Inventory Turnover Benchmarks by Industry 2025", 2025)

$$\frac{\text{Total volume of material used in a year}}{\text{Avarage amount of material stock}} \times 100$$

The goal should be around 5-6, this means that the whole warehouse is "refreshed" 5 to 6 times a year which makes sure that not too much stock is kept in the warehouse, thus resulting in an crowded workplace. But arguably more important is that there is not a shortage of stock in the warehouses. This value aligns with know values from the industry. This value is lower than in other industries since the customer decision times are longer since furniture is made to last longer. This makes the turnover rate lower in response ("Inventory Turnover Benchmarks by Industry 2025", 2025).

7 | Conclusion

To conclude, the biggest flaw of the process *Sourcing sustainable materials* was the fact that supplier did not supply the correct details at the start of the process. This meant that a lack of correct documents was only discovered in the middle of the process. Therefore, a lot of time and resources where wasted every time not all needed documents where supplied by the supplier. In the redesign of this process, we decided that IKEA had to be more clear at the start of the process, meaning suppliers always deliver all needed documents. This means that the process always starts with all needed documents, which means no time and resources will be wasted. A report after each order was also removed. This report would mainly contain ambiguous data (compared with other reports), since the information about suppliers stays the same. To check whether the redesigned process was working, there were 3 indicators introduced. The first being a percentage of approved suppliers. This shows how many suppliers go through the process and also become an IKEA supplier. The second indicator shows the average amount of time it takes to analyze a supplier according to the 4 activities modeled in the last BPMN (Figure 3). The last indicator shows whether the stock is in line with turn over of IKEA. In other words, whether the supply follows the line of needed inventory (not to much, not to little).

References

Collection. buy online & in-store! [IKEA]. (n.d.). Retrieved March 11, 2026, from https://www.ikea.com/nl/en/cat/collections-collections/

Harmsen, M., ter Steege, M., & van Veldhuizen, M. j. (2026). Modeling sustainability goals of IKEA.

Inventory turnover benchmarks by industry 2025. (2025, September 21). Retrieved March 13, 2026, from https://www.onrampfunds.com/resources/inventory-turnover-benchmarks-by-industry-2025

IWAY. (n.d.). *Iway standard.* Retrieved February 14, 2026, from https://www.igpn.org/focus_on/kit/GP&GPP_Starter_Kit/resources/IMPL_ASST/iway_standard.pdf

Peterka, P. (2025, February 19). *Value analysis in six sigma. what is it, how does it work, and how to do it?* [SixSigma.us]. Retrieved March 11, 2026, from https://www.6sigma.us/six-sigma-in-focus/value-analysis/

The wood we use – IKEA global [IKEA]. (n.d.). Retrieved March 11, 2026, from https://www.ikea.com/global/en/our-business/sustainability/wood-we-use/